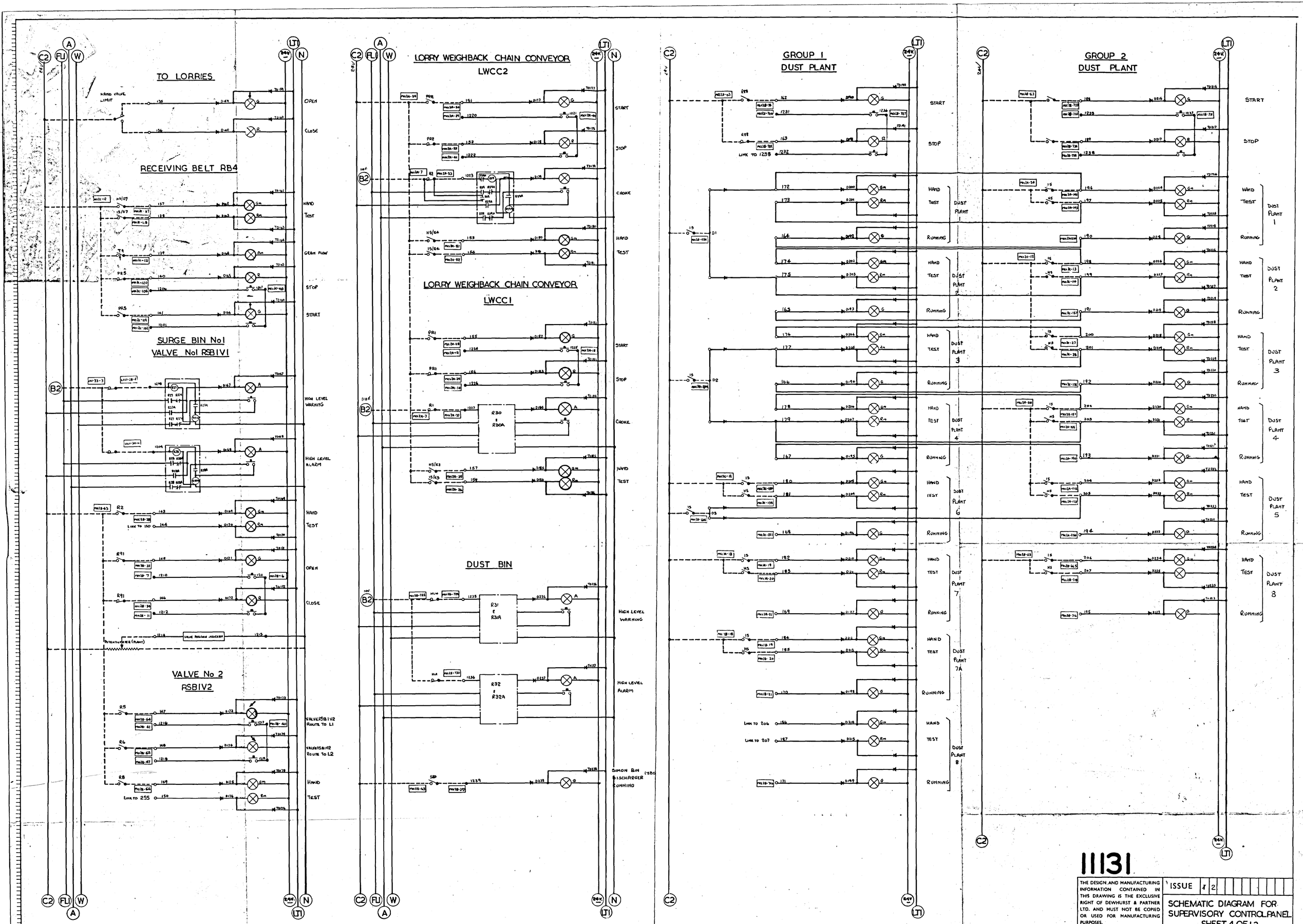

11131

THE DESIGN AND MANUFACTURING INFORMATION CONTAINED IN THIS DRAWING IS THE EXCLUSIVE RIGHT OF DEWHURST & PARTNER LTD. AND MUST NOT BE COPIED OR USED FOR MANUFACTURING PURPOSES.

ISSUE 1 2

SCHEMATIC DIAGRAM FOR SUPERVISORY CONTROL PANEL
SHEET 4 OF 12

DEWHURST & PARTNER LTD.
MELBOURNE WORKS HOUNSLOW

TITLE: SCHEMATIC DIAGRAM FOR SUPERVISORY CONTROL PANEL - SEAFORTH GRAIN TERMINAL

REVISION:	REVISION:	REVISION:	REVISION:	REVISION: 1 LEVEL CONTROL CONTACTS WERE H/Q.	DRAWN BY	KEY DIAG. No.
ORIGIN: / / SGD.	ORIGIN: / / SGD.	ORIGIN: / / SGD.	ORIGIN: / / SGD.	ORIGIN: 1/3/73 SGD JS	DATE 4/1/73	EXT. DIAG. No.
					CHECKED BY	REL. DIAG. No.
					APPROVED BY	PANEL LAYOUT No.
					DATE	

DTX 361AR/4

SCP